PhotoFluor® LM-75

Operating Manual

This manual contains important information necessary for the safe and efficient operation of the PhotoFluor LM-75 light source. Please read the manual in its entirety and heed all safety warnings before operating the light source.

Follow all safety precautions!

The 89 North® PhotoFluor® LM-75 (P/N 12000-000-000-XX) light source system is designed and tested in accordance with IEC 61010-1, CAN/CSA C22.2 Number 61010-1, CENELEC EN 61326-1, and FCC Part 15 Subpart B, Class A.

Prior to use, carefully unpack and inspect all components for any signs of damage which may have occurred during shipping. If shipping damage is suspected, notify 89 North or your authorized 89 North distributor immediately.

89 North customer service or your authorized 89 North distributor should be informed immediately in the event of any damage or malfunction in the equipment.

89 North®
1 Mill St. Unit 285
Burlington, VT 05401
U.S.A.
877-417-8313
+1-802-881-0302
www.89North.com

Contents

1 Document Symbols 3

2 Equipment Symbol Definition 3

3 Specifications 4

4 Introduction and Intended Use 4

5 Safety 5

6 System Overview 7

7 Initial Setup 10

8 Operation 12

9 Error Messages 14

10 System Status Indicator 15

11 Replacing the Lamp 16

12 Maintenance 21

12.1 Trouble Shooting 21

12.2 Disposal of the Lamp 22

12.3 Limited Guarantee / Warranty 23

1 Document Symbols

Special instructions are emphasized as follows:

NOTE:	*This term contains important information regarding set-up and operation to facilitate ease of use and obtain effective results.*

This term contains critical information regarding safe handling and use of this system. Device malfunction or property damage could result if these instructions are not followed.

WARNING: *This term contains critical information by identifying conditions or practices that may result in injury or loss of life if these instructions are not followed.*

2 Equipment Symbol Definition

Caution, risk of electric shock

This symbol indicates there are hazardous electrical parts inside the equipment.

Caution, risk of danger

This symbol indicates that safe handling and usage instructions must be followed to a avoid injury and/or damage.

Caution, hot surface

This symbol indicates a potential burn hazard. Care should be taken to avoid touching this surface until the unit is allowed to cool.

3 Specifications

Physical Specifications	
Dimensions	Length: 18 cm (7.1 inches) Width: 17 cm (6.7 inches) Height: 19 cm (7.5 inches)
Weight (lamp house)	5.2 lbs max (with lamp installed)
Operating Conditions	
Required Clearance	15 cm (6 inches) around sides and top of lamp house, 2.5 cm (1 inch) on bottom
Operating Temperature	10-28°C / 50-82°F
Operating Humidity	<95% relative humidity, non-condensing
Power Supply	
AC Input Power Requirements (to external power supply)	100-240V AC, 50/60 Hz, 2.0 amps (maximum)
DC Input Power Requirements (to lamp house)	12 VDC, 10A
Fuses	None
Other	
Lamp Life	2000 hours expected, 1500 guaranteed
Spectral Range	340 nm – 800 nm

4 Introduction and Intended Use

The PhotoFluor® LM-75 is a high power light source specifically designed for fluorescence imaging. It contains a 75W metal-halide lamp and associated optics to deliver bright illumination from 340 nm to 800 nm.

The LM-75 is designed to mount directly to a microscope and deliver light without the use of a liquid light guide. The unit comes with a factory installed microscope mount and optics specific to the intended microscope.

The metal-halide lamp will operate for at least 1500 hours of use. The light source reports the number of hours of use on the display panel and alerts the user when the lamp lifetime has been exceeded.

The LM-75 includes safety interlocks that, when tripped, will remove power from the lamp. Do not override these interlocks. Doing so may result in injury to the user and/or the unit and will immediately void the warranty.

5 Safety

The LM-75 utilizes a high-powered metal-halide lamp that produces heat as well as visible, NIR, and UV light. Proper care must be taken in setup and operation to prevent injury.

The LM-75 light source incorporates a safety interlock which prevents the lamp from being powered with the back panel removed.

If the equipment is used in a manner not specified within this manual the protection provided by the equipment may be impaired.

The rear cover should be removed for lamp removal and replacement ONLY. Never attempt to remove the rear cover panel with the unit powered. To ensure power is removed, unplug the power supply from the wall outlet. All maintenance, including lamp replacement, must be performed with AC power removed.

The lamp should only be handled wearing gloves and suitable eye protection.

WARNING: Use only the 89 North supplied lamp replacement. Never substitute the lamp with another manufacturer's lamp.

WARNING: Do not remove any covers except the rear cover. Removal of other panels could expose the user to electrical hazards and moving parts.

Do not operate the unit near any flammable materials including flammable gases or liquids.

The lamp contains trace amounts of mercury and other metals. If the lamp is damaged or broken, proper handling and disposal are required for safety.

www.lamprecycle.org

WARNING: Used lamps should not be discarded in the conventional waste stream. The lamps contain metals that must be handled as potentially toxic.

The light source is designed to sustain a lamp burst within the lamp house enclosure. The lamp house may, however, suffer internal damage as a result. Only qualified personnel shall inspect the unit for internal damage.

WARNING: The light source produces ultraviolet radiation. Never look directly at the lamp or light reflected from the output of the microscope mount.

WARNING: Never operate the lamp house disconnected from the microscope as ultraviolet and NIR radiation can be harmful to the unprotected eye and skin.

WARNING: LAMP EXPLOSION HAZARD - The lamp contains toxic gasses under high pressure. In the event of an explosion, mercury vapor, high temperature gasses, and very fine glass may exit the unit.

All persons should leave the surrounding area at once to prevent mercury inhalation.

The area should be ventilated for 30 minutes.

The area surrounding the light source should be cleaned using an appropriate absorbent such as Mercurisorb® or Mercon™ Mercury Spill Kit II or Mercury Spill Clean-Up Kit.

WARNING: Inhaling mercury vapor or small particles of mercury or its compounds can be harmful to lungs, kidneys, and the nervous system. Injuries to one's health can also arise due to penetration of the skin or resorption via the gastro-enteric tract.

WARNING: To prevent risk of explosion:

- Replace lamp after 2000 hours of use with the required lamp only
- Do not bump the unit while in use
- Do not touch any portion of the lamp except the ceramic base, mounting ring and power wires as improper handling may shorten lamp life and may lead to catastrophic failure of the lamp.
- If the light source is used in a manner in which it is continuously powered ON, cycle the light source power weekly at a minimum to exercise fault identification and protection features.

WARNING: Never operate the lamp house disconnected from the microscope as ultraviolet and NIR radiation can be harmful to the unprotected eye and skin.

WARNING: The light source produces significant amounts of heat. Always allow the light source components to cool to ambient temperature before attempting any adjustments or replacement of parts.

WARNING: After 2000 hours of operation, the metal-halide lamp must be replaced to ensure suitable performance and safety. The light source will alert the user at 1500 hours that the lamp is due for replacement. At 2000 hours, the light source will cease operation as the lamp is no longer safe to use.

6 System Overview

Light Source:

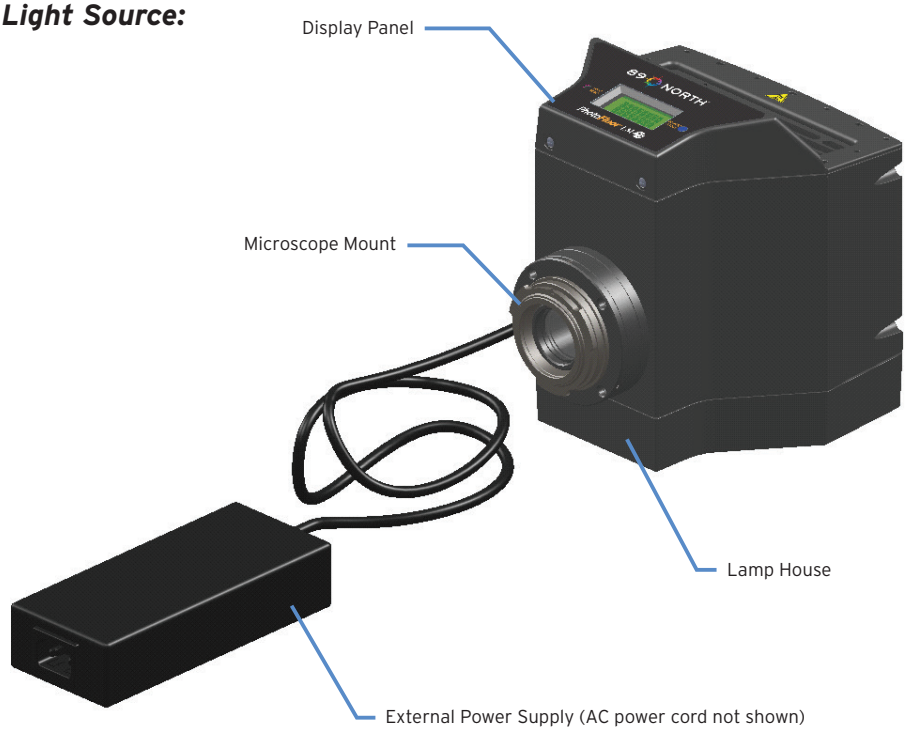

Back Panel:

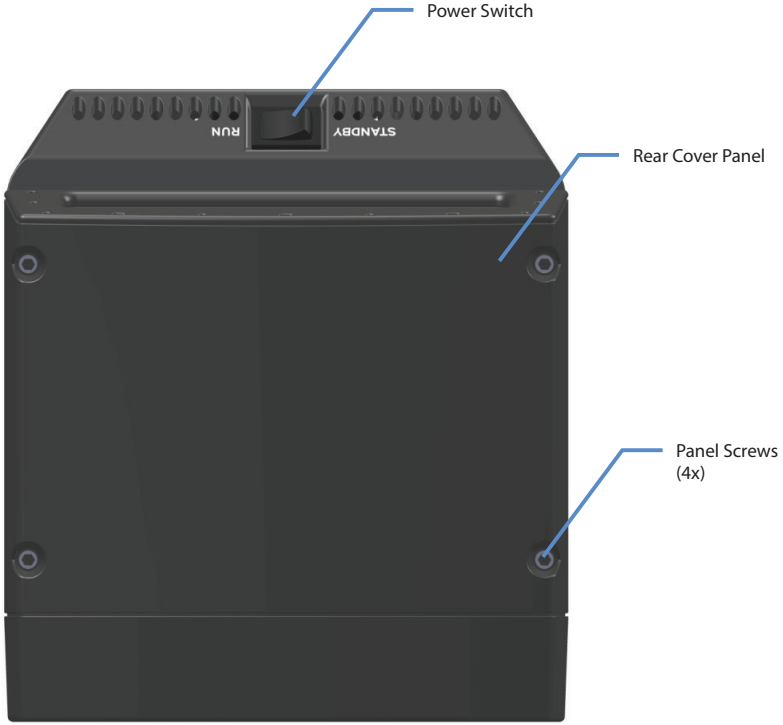

Top:

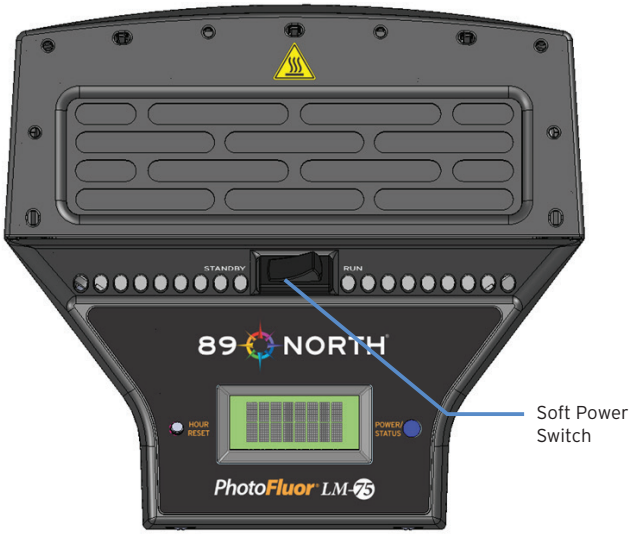

Display Panel:

7 Initial Setup

System Components

The PhotoFluor LM-75 illumination system is comprised of:

- Lamp house, with 75W lamp installed
- External power supply: AC/DC adapter
- Electrical power cord
- Toolkit

Carefully unpack all components. Take care not to touch or contaminate the external output optics. If necessary, the lens can be cleaned with isopropyl alcohol and a soft lint free cloth.

Picking a Location

Mount the lamp house to the epi-illumination port of the microscope. Set the external power supply on a flat surface in a place that allows for adequate air ventilation on all sides. Maintain 6" (15 cm) of clearance on all sides and top of the lamp house and 1" (2.5 cm) clearance on the bottom. Note that the clearance between the PhotoFluor LM-75 and other pieces of heat-producing equipment should be increased to ensure that the heat from one unit does not contaminate the required cool air stream for the other.

NOTE: The LM-75 is delivered with a factory installed microscope mount and optics specific to the OEM microscope specified at the time of order. Consult an 89 North sales representative or your authorized 89 North reseller for microscopes supported with your system.

NOTE: Maintain **at least 6" of clearance** around all sides and top of the light source and **at least 1" of clearance** on the bottom for adequate ventilation.

Connecting the AC-DC Power Supply and AC Power Cord

Insert the external power supply cord receptacle into the DC jack on the side of the lamp house. Insert the AC power cord plug receptacle end into the AC plug on the external power supply. Plug the AC power cord into a standard AC outlet. See the technical specifications in this manual for power requirements.

Only the power cord supplied with the unit should be used. The use of an inadequately rated power cord may impair safe operation of the equipment.

Powering the System "ON"

Connecting the LM-75 to the power supply and plugging the power supply into a standard AC outlet supplies main power to the unit. With all power connections made, the unit is in 'standby mode'. Standby mode keeps the system powered but in a state of reduced power consumption. When in Standby mode, the status light on the top panel will be extinguished. It is perfectly acceptable to leave the system in Standby mode for long periods of time. The lamp will not operate in standby mode.

To apply system power and turn the light source 'On', toggle the soft power switch on the top of the unit to the 'Run' position. To turn the unit 'Off', toggle the switch to the 'Standby' position.

Power remains applied to the unit when the unit is in Standby mode, as indicated by the soft power rocker switch. Toggling the switch to the 'Run' mode applies power to the lamp ballast and initiates the operation of the light source. To remove power from the unit, the unit must be disconnected from the AC power outlet.

NOTE: This equipment has been successfully tested for EMI/RFI radiation and susceptibility; however, if not installed and used in accordance with these instructions, interference with other devices in the near vicinity may occur. If this equipment does cause harmful interference to other devices, which can be determined by turning the equipment off and on, the user is encouraged to try to correct the interference by one or more of the following measures:

- Reorient or relocate the receiving device.
- Increase the separation between the equipment.
- Connect the equipment into an outlet on a circuit different from that to which the other device(s) are connected.
- Consult the manufacturer or field service technician for help.

8 Operation

Following initial setup, the PhotoFluor LM-75 is ready to operate. Switching the power switch to the 'Run' position will apply system power to the unit and initialize the start-up sequence.

Note: *In the following figures, "00.02.XX" represents the firmware revision, and "Hrs=XXXX" represents the reported accumulated hours since the last lamp reset. The actual firmware revision installed and actual lamps hours will be displayed on your unit.*

Strike Light Mode

At start-up, the unit enters Strike Light mode and ignites the lamp. The unit remains in this mode for two minutes, allowing for multiple strikes to ignite the lamp if necessary.

NOTE: To prevent damage to the lamp, turning the power switch to 'Standby' during Strike Light mode will NOT extinguish the lamp.

The Status Indicator LED will blink slowly (~1/sec) and the following screen is displayed when the unit is in Strike Light mode:

Warm-Up Mode

After the lamp has started, the unit enters Warm-Up mode. Warm-Up mode extends for 3 minutes, allowing the lamp to reach a steady-state.

NOTE:	To prevent damage to the lamp, turning the power switch to 'Standby' during Warm-Up mode will NOT extinguish the lamp. In an emergency situation power can be removed by simply unplugging the power supply from the lamp house.

During Warm-Up mode, the Status Indicator LED will blink slowly (~1/sec) and the following screen is displayed:

Normal Mode

After the lamp is allowed to warm up, the unit is in Normal mode. Once in Normal mode, the unit has achieved steady-state and is ready for use.

In Normal mode, the Status Indicator will be on continuously and the following screen is displayed:

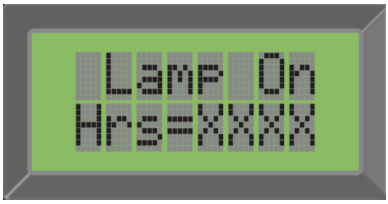

Cool Down Mode

In Normal mode, turning the power switch to the 'Standby' position will extinguish the lamp and put the unit into Cool Down Mode. Cool Down mode is a 3-minute duration, during which the lamp is cooled in a controlled manner to prevent damage and extend lamp life. The lamp cannot be restarted during Cool Down mode.

Once cool down has completed, the unit will enter Standby mode until the power switch is switched to the 'Run' position.

In Cool Down mode, the Status Indicator LED will blink slowly (~1/sec) and the following screen is displayed:

9 Error Messages

Error messages display important information about the unit. This section describes each message and the protocol for handling the error.

Strike Error

This error occurs if the lamp has failed to ignite during Strike Light mode. Cycle the power switch to reset the unit. If the error persists, call for technical help.

Unit Open

This error occurs if the back panel is not secured. The ballast and lamp will be disabled. Secure the rear cover with the 4 retained screws and cycle the power switch to clear the message. Call for technical help if the problem persists.

Ballast Error

This error occurs if the lamp ballast encounters a fault any time following Strike Light mode. The lamp will be disabled. Cycle the power switch to reset the unit and clear the fault. If the error persists, call for technical help.

Over Temperature

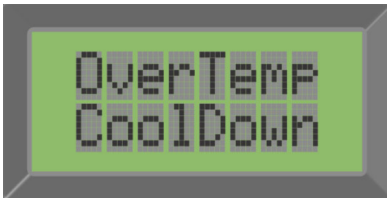

This error indicates that the unit has overheated or has a temperature sensor fault. Turn the unit off ('standby') and check that the unit has proper ventilation: assure that the cooling air input on the bottom of the unit and the exhaust vent on the top of the unit are not blocked. Allow ample time for the unit to cool and turn the unit back on ('Run'). Call for technical support if the error persists.

Hours Exceeded

This error indicates that the lamp life has been exceeded. Lamp replacement is required. Follow the instructions in Section 11 for replacing the lamp.

10 System Status Indicator

The blue system Status Indicator LED is located on the display panel of the light source. The Status LED has 4 possible states:

Solid:	Indicates that operation is normal.
Slow blinking:	Indicates the system is 'On' but not ready for use. This state corresponds with the following modes: • Strike Light • Warm Up • Cool Down The 'slow' blink rate is approximately once per second.

Rapid blinking:	Indicates an error is present which is preventing operation of the system. This state corresponds with the following errors: • Unit Open • Strike Error • Ballast Error • Over Temperature • Hours Exceeded The 'fast' blink rate is approximately 3 times per second.
Off:	Indicates that the unit is 'off', either in Standby mode or with main power removed.

11 Replacing the Lamp

The PhotoFluor LM-75 75 watt lamp must be properly installed to allow ignition, proper cooling, and alignment to assure the longevity of the lamp. Your unit is shipped with the lamp installed. When removing the lamp, take care not to touch the reflector surface (inside or outside) as finger oils or contaminants will harm the lamp. The lamp's connector must also be properly installed.

Use only lamps provided by 89 North or your 89 North authorized reseller for replacing the factory installed lamp.

The lamp should only be handled when wearing gloves and suitable eye protection.

The lamp is pictured below:

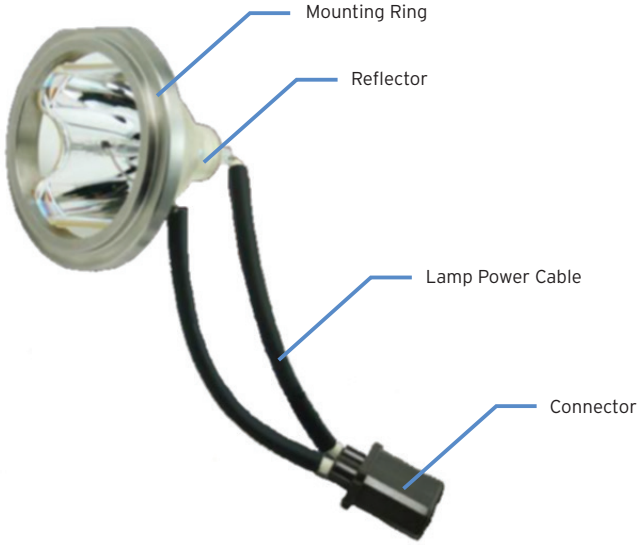

Lamp Replacement Steps

STEP 1 **DISCONNECT POWER**

Remove power by unplugging the AC power cord before attempting to remove the rear cover.

Note: The lamp can be changed with the LM-75 attached to the microscope or with the LM-75 removed from the microscope. Determine whether to remove the unit or leave it attached to the microscope based on your installation and accessibility to the rear panel of the LM-75.

STEP 2 **REMOVE REAR COVER**

Remove the rear cover using the hex driver provided, as illustrated below.

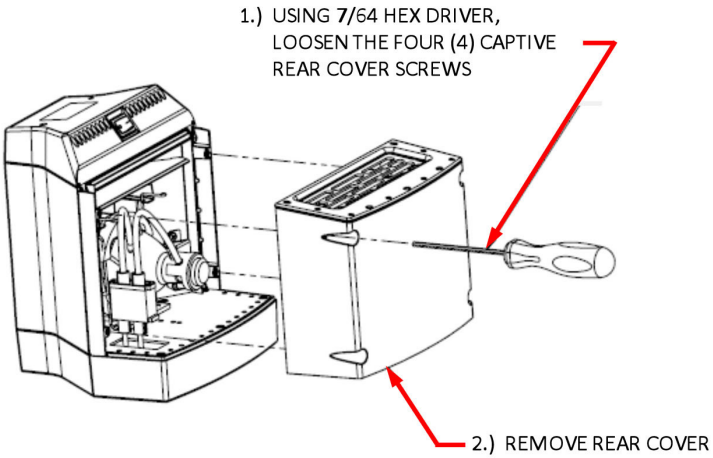

STEP 3 **REMOVE THE LAMP**

For the following steps, refer to the illustration below.

1.) With the rear cover removed, unplug the lamp connector from the ballast connector.

2.) Disconnect the spring retainer.

3.) Swing the spring retainer down and away from the lamp.

4.) Lift the lamp over the cooling air diverter to remove it from the unit.

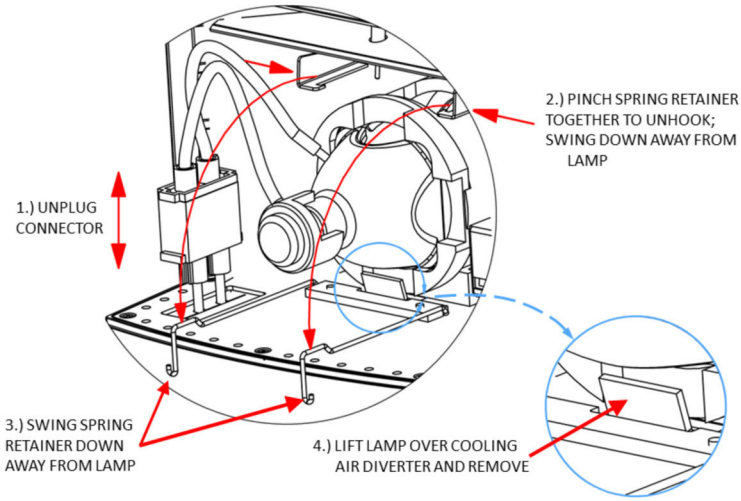

STEP 4 **INSTALL NEW LAMP**

For the following steps, refer to the illustration below.

1.) Orient the flat surface on the lamp mounting ring to the right (i.e., 3 o'clock position).

2.) Insert the lamp into the lamp house by lifting it over the cooling air diverter.

3.) Align the flat on the lamp with the tab on the optics tube installed in the unit. Ensure the lamp is seated fully against the optics tube flange.

4.) Swing the spring retainer up toward the lamp. Take care to ensure the lamp leads are not pinched by the spring retainer.

5.) Pinch the spring retainer together to hook each side to the corresponding retainer slots to lock the lamp in place.

6.) Plug the lamp connector into the ballast connector.

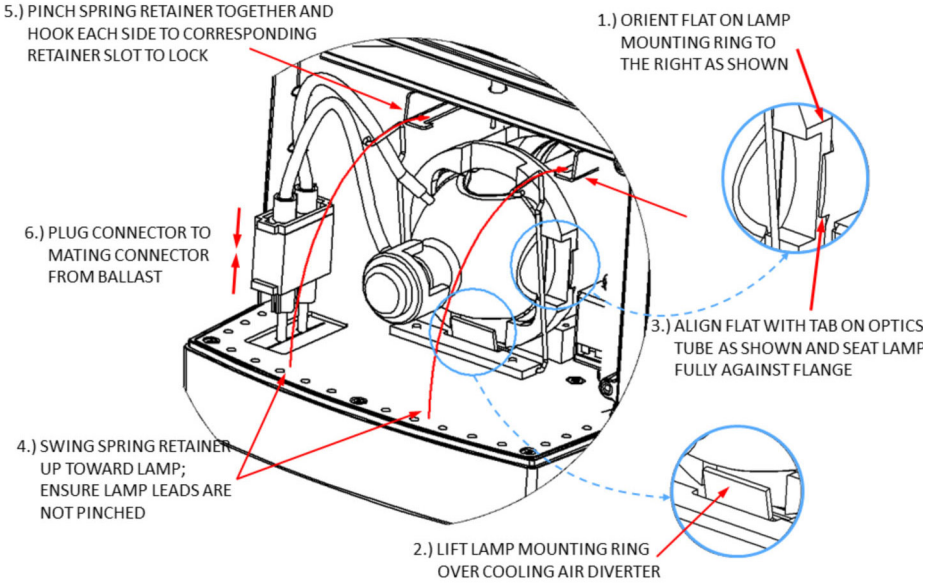

STEP 5 **ATTACH REAR COVER**

Align the rear cover locating the 4 captive screws with the nut inserts on the rear of the main body. Secure the rear cover by tightening the 4 retaining screws as illustrated below.

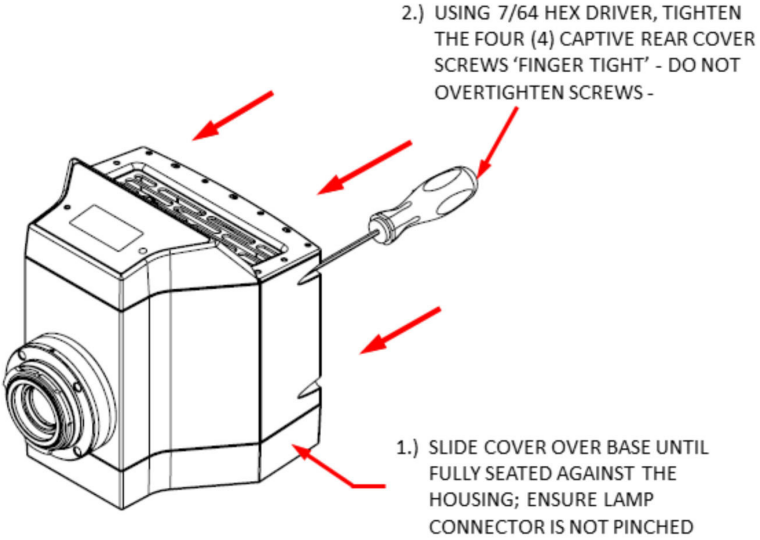

STEP 6 **TURN UNIT ON**

WARNING: If the LM-75 has been removed to perform the lamp replacement, re-attach it to the microscope BEFORE applying power. The lamp produces UV and IR radiation that can be harmful to the unprotected eye and skin.

Plug in the AC power cord and turn the power switch to the 'Run' position.

STEP 7 **RESET LAMP HOUR COUNTER**

If a Lamp Hours Exceeded error has not occurred prior to changing the lamp, the unit will go into Warm Up mode upon restarting. Depress and hold the lamp Hour Reset button for no less than 5 seconds to reset the lamp hours to 0.

If a Lamp Hours Exceeded error is present, the unit will display this fault upon restarting. Depress and hold the lamp Hour Reset button for no less than 5 seconds to reset the lamp hours to 0. The unit will automatically restart following the lamp reset and the fault will be cleared.

12 Maintenance

All maintenance other than lamp removal and replacement is to be performed by qualified personnel only. Under no circumstances should any covers other than the back panel be removed as electrical and mechanical hazards exist.

Keep the vents dust free. If the unit should malfunction and the troubleshooting matrix located in the next section does not correct the problem, please contact 89 North or your authorized 89 North distributor.

12.1 Trouble Shooting

Fault	Causes and Remedies
Unit won't power up	**Check** AC power and that cord is plugged into wall outlet. **Check** AC-DC power supply and that cord is plugged into unit. **Check** Is the unit in 'Standby' mode? **Contact** If problem persists, contact 89 North customer service or your 89 North authorized reseller for further instructions.
Unit displays error message	**Note** Error messages section of this manual. **Contact** Contact 89 North customer service or your 89 North authorized reseller regarding errors that cannot be resolved and may require servicing. Be sure to write down the exact error messages seen.

Lamp does not start	**Check** Rear cover is secured. If rear cover is not secured, lamp will not start. **Check** Lamp life. If 2000 hours have been exceeded, lamp must be replaced. **Check** Lamp is intact and properly installed. If lamp is not intact properly installed, it will not start. Follow steps 1 and 2 of the Lamp Replacement instructions for accessing the lamp. **Contact** If problem persists, contact 89 North customer service or your 89 North authorized reseller for further instructions.
Safe operating temperature exceeded	**Check** Ambient air temperature too high; improve air circulation. **Check** Air vents blocked or restricted. **Contact** If problem persists, contact 89 North customer service or your 89 North authorized reseller for further instructions.

12.2 Disposal of the Lamp

The lamp contains heavy metals and must be disposed of properly. Please consult the following web address for current information: www.lamprecycle.org.

12.3 Limited Guarantee / Warranty

The PhotoFluor LM-75 is under warranty for one year from the date of delivery provided it is operated as described in this manual. Lamps have a typical life expectancy of at least 2000 hours with a guaranteed life of 1500 hours. The 1500 hour warranty will result in replacement of a lamp when all of the following conditions are met:

1. The nature of the lamp failure is that it will not ignite after fewer than 1500 hours of operation.

2. The user confirms that the lamp was handled properly.

89 North reserves the right to deny replacement of lamps that appear to have been damaged by improper use.

89 North's liability to the customer is limited to the replacement cost of the PhotoFlour LM-75 unit.